ARDUINO

Lec2

Written by : Mohammad Prince

✓ Notes :-

- In the previous lecture , we introduced the Arduino and micro controllers , but the you must know that the micro controller is cheaper than the Arduino but the Arduino make the programming of the micro controller easy .

- If you have two micro controllers and you want to compare between them , so that there are faces to compare such as rom and ram and the inputs and outputs and CPU to implement the code perfectly .

- There are types of modified micro controller such as :

Arduino Uno

Esp 32

Esp 32 cam

Esp 8266

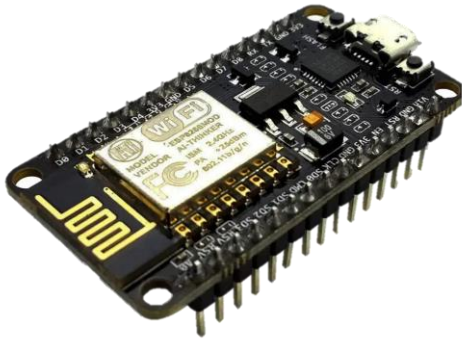

➢ Required task : search about the 4 types and write a report for them .

SOME CODES

➢SOME CODES :

- To define an pin of Arduino to be input or output → pinMode(no. of pin , INPUT OR OUTPUT) .
- To write an output to be 1 or o → digitalWrite(no. of pin , HIGH OR LOW)
- To read an input if it high or low → digitalRead(no. of pin)
- Delay for some time in milliseconds → delay (num. of milliseconds)
- To get the time in this instant → millis( )

SOME APPLICATIONS

REQ : REMEMBER THE SYNTAX OF C++

1. Blink delay

```
#define LED 10
// int t1;
void setup() {
  // put your setup code here, to run once:
  pinMode(LED,OUTPUT);
  // t1=millis();
}

void loop() {
  // put your main code here, to run repeatedly:
  digitalWrite(LED,HIGH);
  delay(2000);
  digitalWrite(LED,LOW);
  delay(1000);

}
```

Output :-
The led on the pin 10 will be on for 2 sec and off for 1 sec .

✓ Another Soln :-

```
#define LED 13

bool flag=true;
int t1;
void setup() {
  // put your setup code here, to run once:
  pinMode(LED,OUTPUT);
  t1=millis();

}

void loop() {
  // put your main code here, to run repeatedly:
  if ((millis()-t1)<3000){
      if (flag) {
        digitalWrite(LED,HIGH);

      }
      else{
        digitalWrite(LED,LOW);
      }}
  else{
    flag=!(flag);
    t1=millis();
  }


}
```

Output :-
The led on the pin 13 will be on for 3 sec and off for 3 sec .

2. Press a SW to turn the led on

```
#define SW 10
#define LED 13
void setup() {
  // put your setup code here, to run once:
  pinMode(SW,INPUT);
  pinMode(LED,OUTPUT);
}

void loop() {
  // put your main code here, to run repeatedly:
  if (digitalRead(SW)==HIGH){
    digitalWrite(LED,HIGH);
  }else{
    digitalWrite(LED,LOW);
  }
}
```

Output :-
The led on the pin 13 will be on when the pin 10 has a high input .

✓ Note : (types of SW)

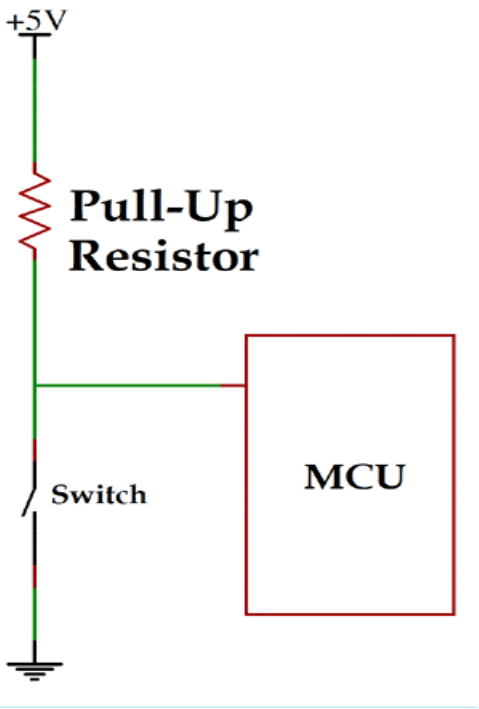

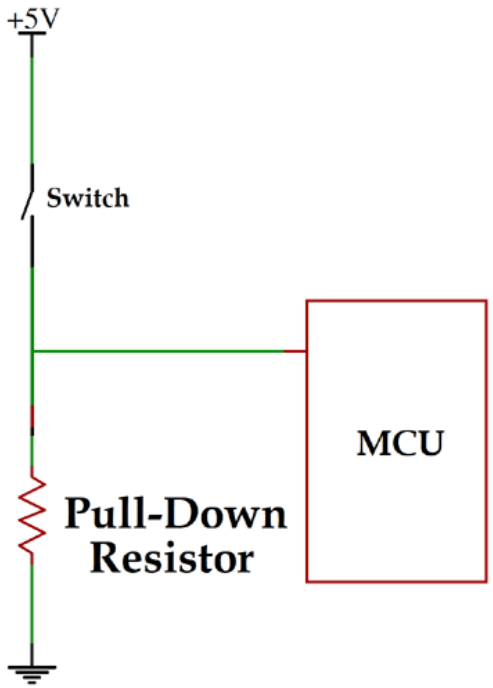

3. One SW to change the mode of led to be OFF or ON

```
# define LED 13
# define SW 10
bool flag;
void setup() {
  // put your setup code here, to run once:
  pinMode(LED,OUTPUT);
  pinMode(SW,INPUT);
  flag=false;

}

void loop() {
  // put your main code here, to run repeatedly:
  if (digitalRead(SW)==HIGH){
    flag=!flag;
  }
  if (flag){
    digitalWrite(LED,OUTPUT);
  }
  else{
    digitalWrite(LED,LOW);
  }

  }
```

Output :-
The led on the pin 13 will be on for when the pin 10 has high until the SW is pressed .

4. A Traffic Light Project

```
int red = 10;
int yellow = 11;
int green = 12;
int t1;
int c;
void setup(){

  pinMode(red, OUTPUT);
  pinMode(yellow, OUTPUT);
  pinMode(green,  OUTPUT);
  t1=millis();
  c=1;

}
```

```
void loop(){

  if ((millis()-t1)<2000){

    if(c==1){

      digitalWrite(green,LOW);
      digitalWrite(red,HIGH);

    }

    else if(c==2){

      digitalWrite(red,LOW);
      digitalWrite(yellow,HIGH);
    }
    else if(c==3){
      digitalWrite(yellow,LOW);
      digitalWrite(green,HIGH);
    }
  }
  else{
    c=c+1;
    t1=millis();
    if (c==4){
      c=1;
    }
  }

}
```

MOTOR DRIVER

❑Introduction

- How the motor reverse its move ??

  ✓ By exchanging the VCC and GND for the motor .

- Remember if the type of transistor :

  1. npn : to switch , it needs a high voltage on base . (HIGH (1))
  2. pnp : to switch , it needs a low voltage on base . (LOW (0))

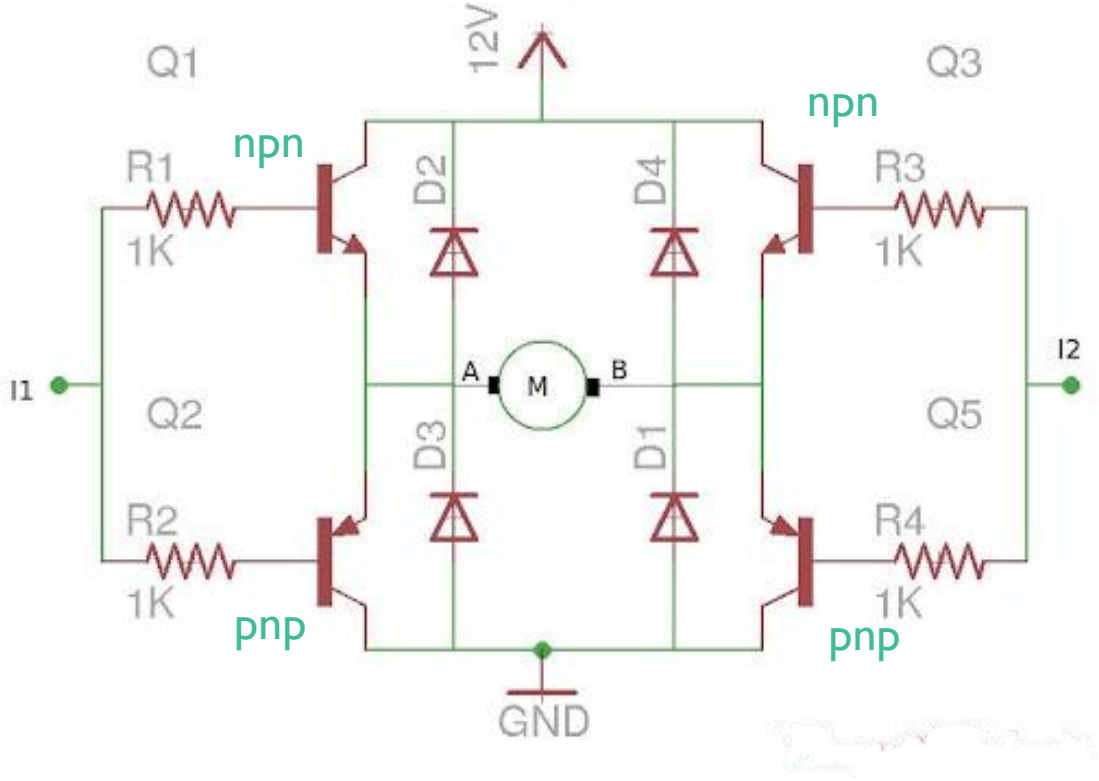

Motor Driver Circuit

I1 I2	OUT
00	OFF
01	ON (B to A) (forward)
10	ON (A to B) (reverse)
11	OFF

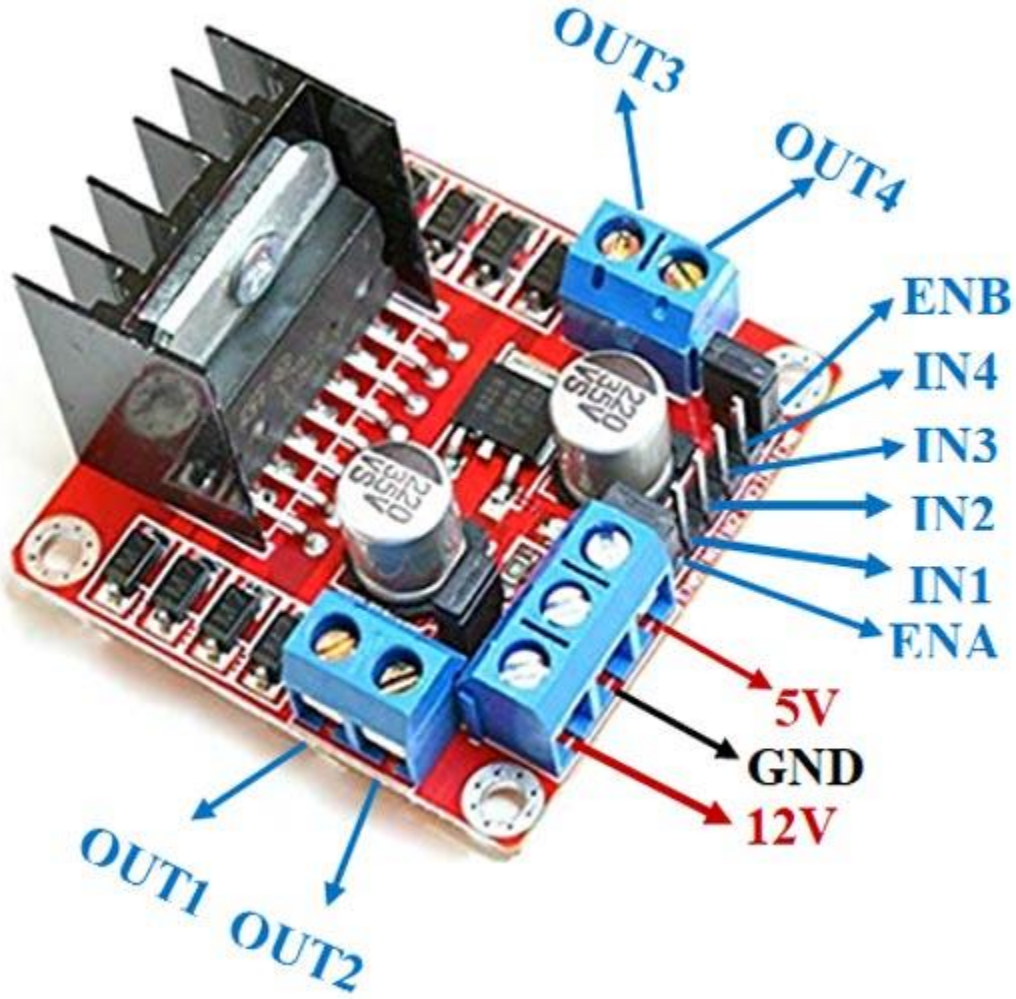

L298 (Motor Driver)

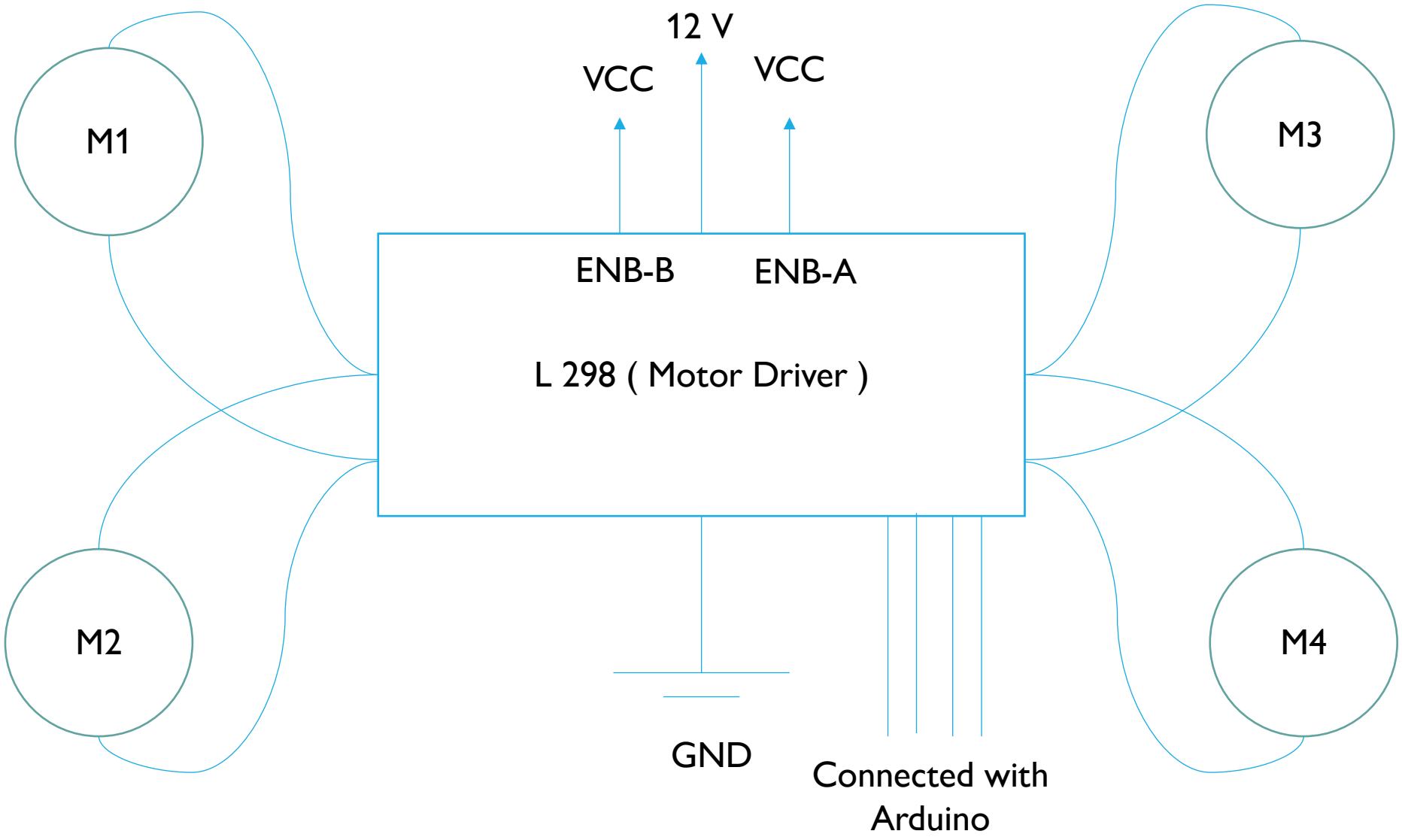
12 V
VCC
VCC
M1
M3
ENB-B
ENB-A
L 298 (Motor Driver)
M2
M4
GND
Connected with
Arduino

```
#define SW1 A0
#define SW2 A1
#define SW3 A2
#define SW4 A3
#define I1 8
#define I2 9
#define I3 10
#define I4 11
void setup() {
  // put your setup code here, to run once:
  pinMode(I1,OUTPUT);
  pinMode(I2,OUTPUT);
  pinMode(I3,OUTPUT);
  pinMode(I4,OUTPUT);
  pinMode(SW1,INPUT);
  pinMode(SW2,INPUT);
  pinMode(SW3,INPUT);
  pinMode(SW4,INPUT);
}
void loop() {
  // put your main code here, to run repeatedly:

  if (digitalRead(SW1)==HIGH){
    digitalWrite(I1,HIGH);
    digitalWrite(I2,LOW);
    digitalWrite(I3,HIGH);
    digitalWrite(I4,LOW);

  }
  else if(digitalRead(SW2)==HIGH){
    digitalWrite(I1,LOW);
    digitalWrite(I2,HIGH);
    digitalWrite(I3,LOW);
    digitalWrite(I4,HIGH);
  }
  else if(digitalRead(SW3)==HIGH){
    digitalWrite(I1,LOW);
    digitalWrite(I2,HIGH);
    digitalWrite(I3,HIGH);
    digitalWrite(I4,LOW);
  }
  else if(digitalRead(SW4)==HIGH){
    digitalWrite(I1,HIGH);
    digitalWrite(I2,LOW);
    digitalWrite(I3,LOW);
    digitalWrite(I4,HIGH);
  }
  else{
    digitalWrite(I1,LOW);
    digitalWrite(I2,LOW);
    digitalWrite(I3,LOW);
    digitalWrite(I4,LOW);
  }

}
```

✓ Motor Driver

Note :
Here we only passed the Variables of switches to the outputs .

THANK YOU

FOR PAYING ATTENTION